Door Hub

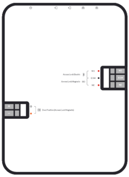
NO
COM
NC
Access Lock Electric
Access Lock Magnetic
+
−
Door Position (Access Lock Magnetic)

a

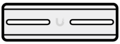

b

c

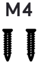

d

1

A

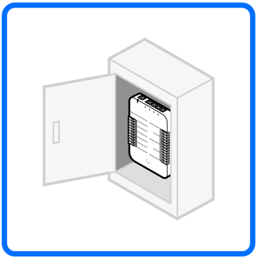

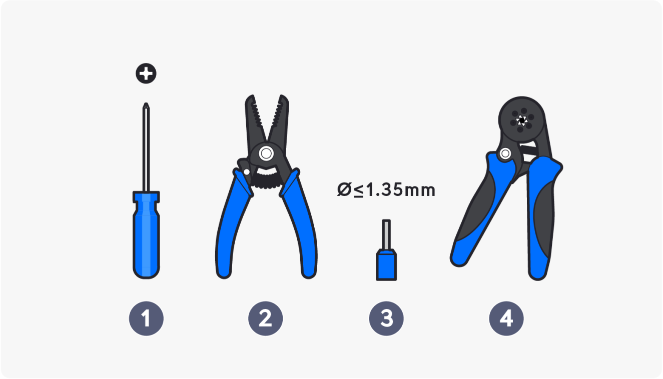
Ø≤1.35mm
1
2
3
4

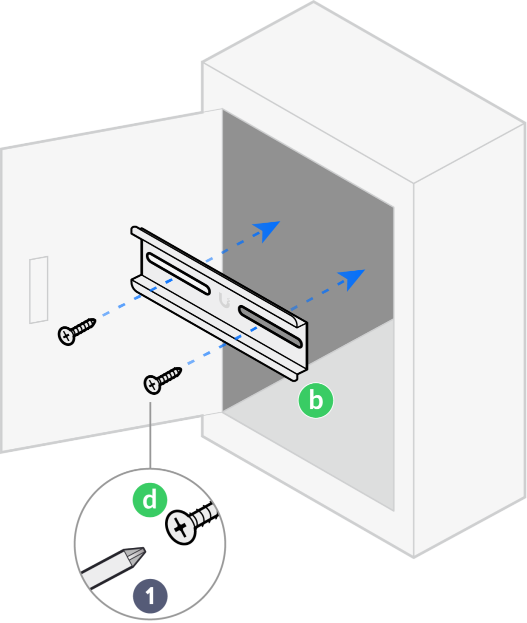

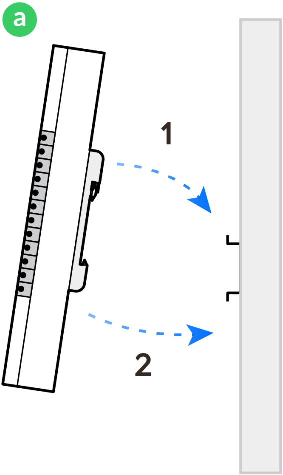

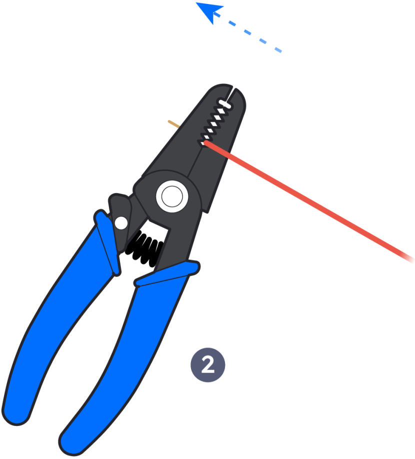

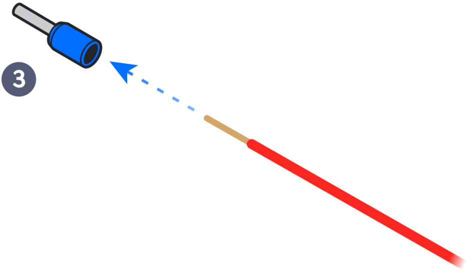

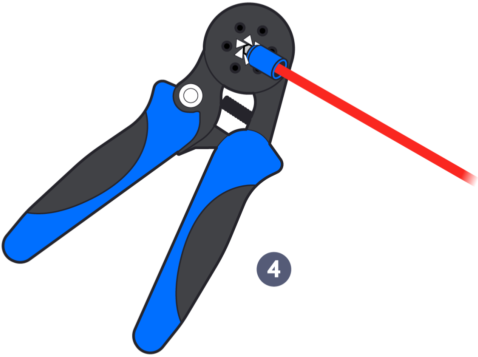

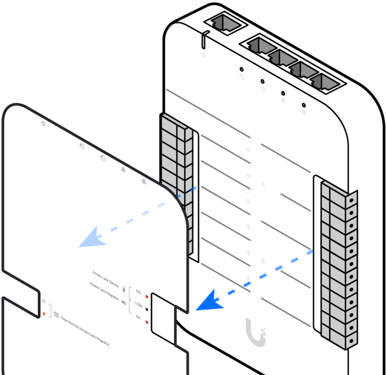
Access Lock Electric
Access Lock Magnetic
NO
COM
NC
Door Position (Access Lock Magnetic)

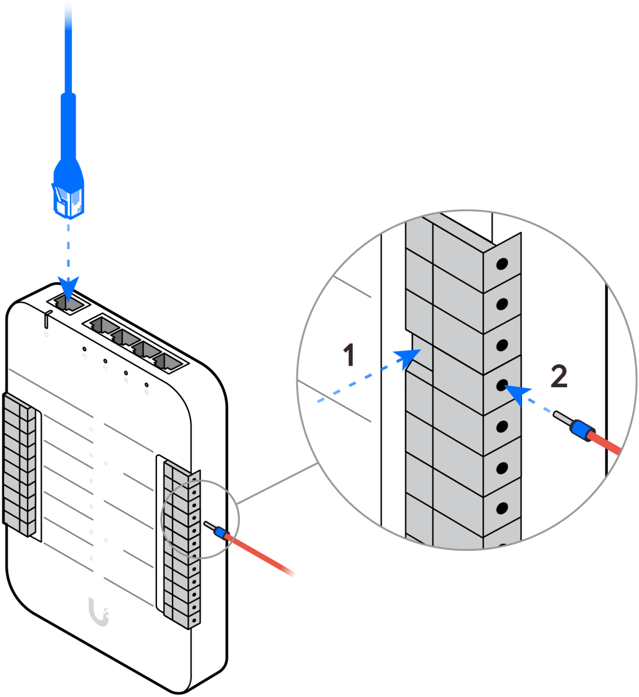

B

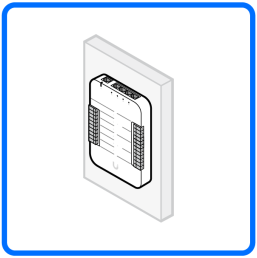

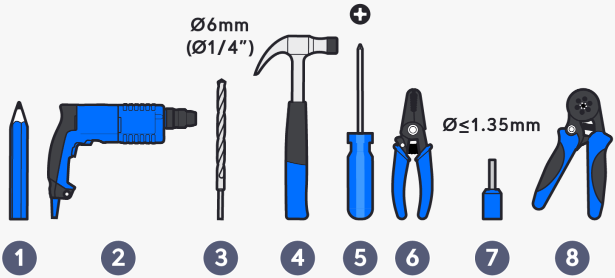
Ø6mm
(Ø1/4")
Ø≤1.35mm
1
2
3
4
5
6
7
8

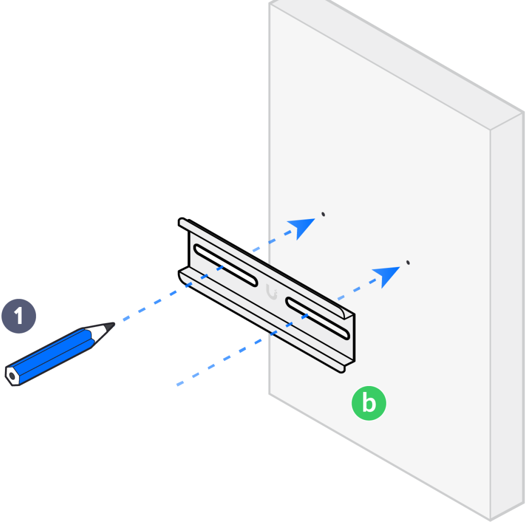

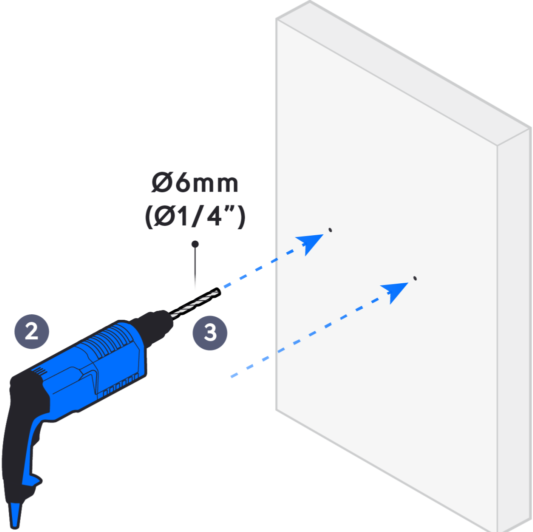

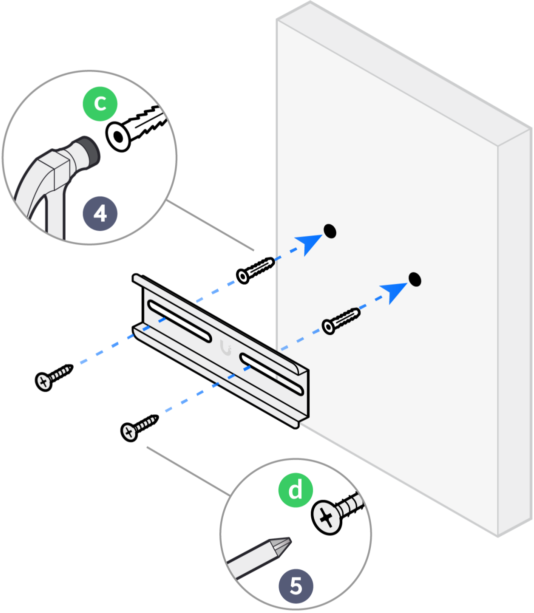

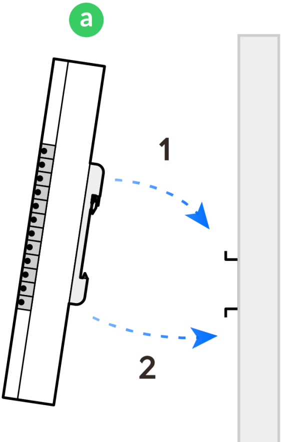

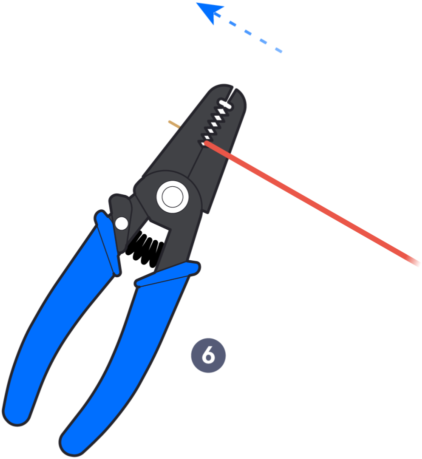

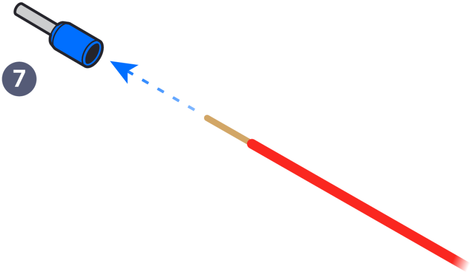

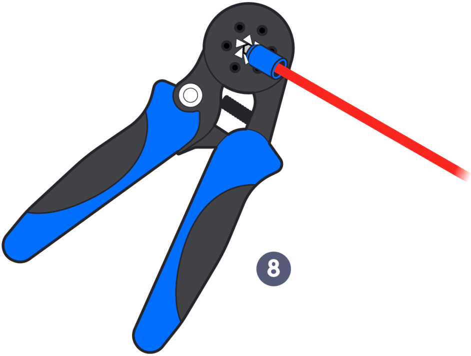

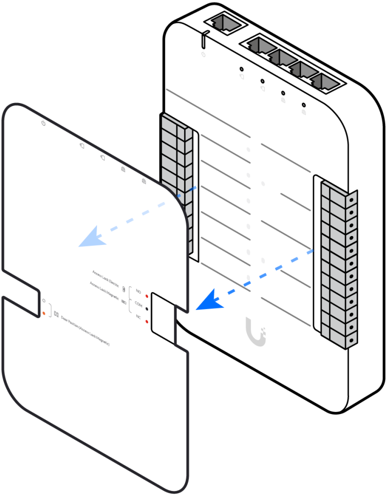
Access Lock Electric
Access Lock Magnetic
NO
COM
NC
Door Position (Access Lock Magnetic)

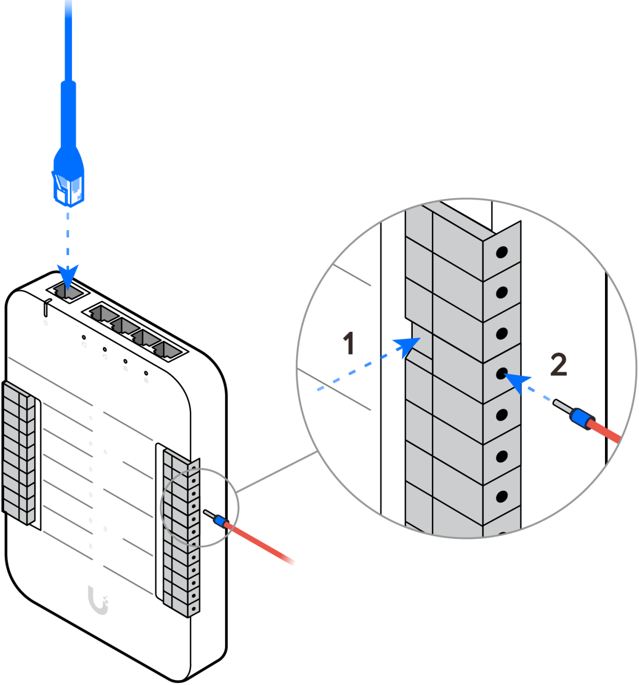

2

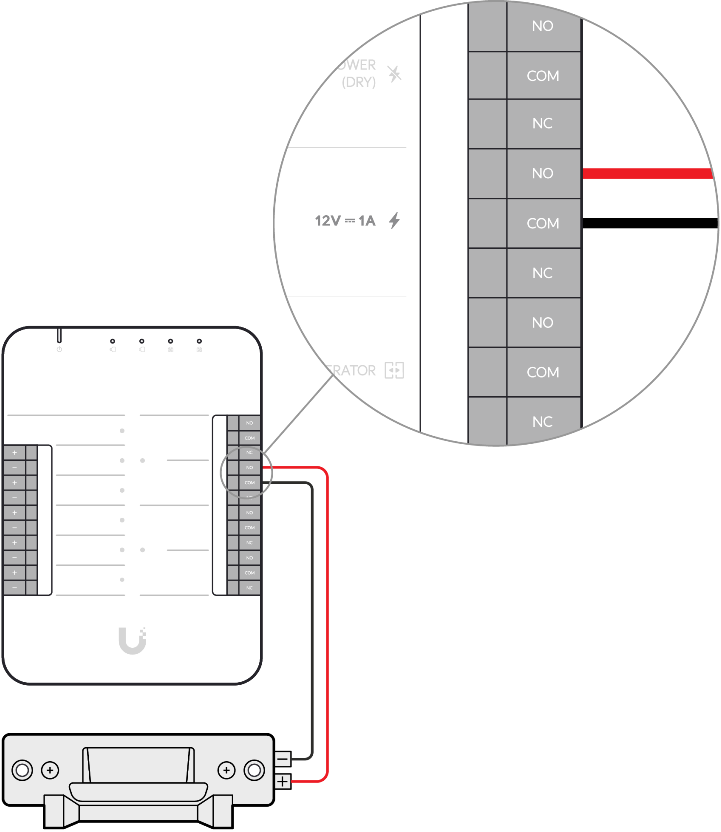
OWER
(DRY)
12V ⎓ 1A
RATOR
NO
COM
NC
NO
COM
NC
NO
COM
NC
+
−

Fail-Secure Lock

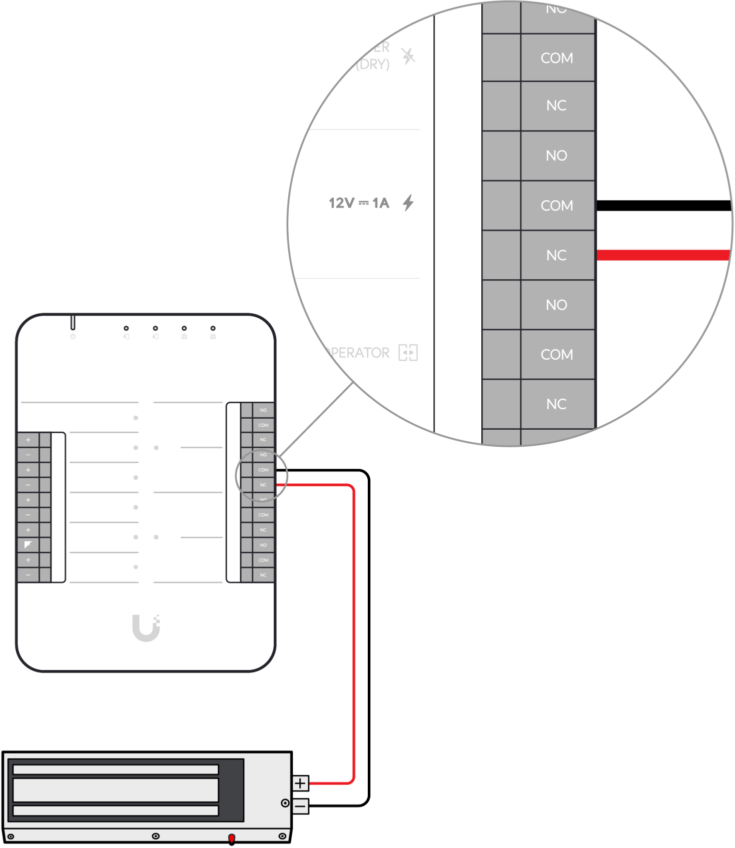
NC
COM
NC
NO
COM
NC
NO
COM
NC
ER
(DRY)
12V ⎓ 1A
PERATOR
NO
COM
NC
NO
COM
NC
NO
COM
NC
NO
COM
NC
+
−
+
−
+
−
+
+
−
+
−

Fail-Safe Lock

Door Position Switch (Door Sensor)

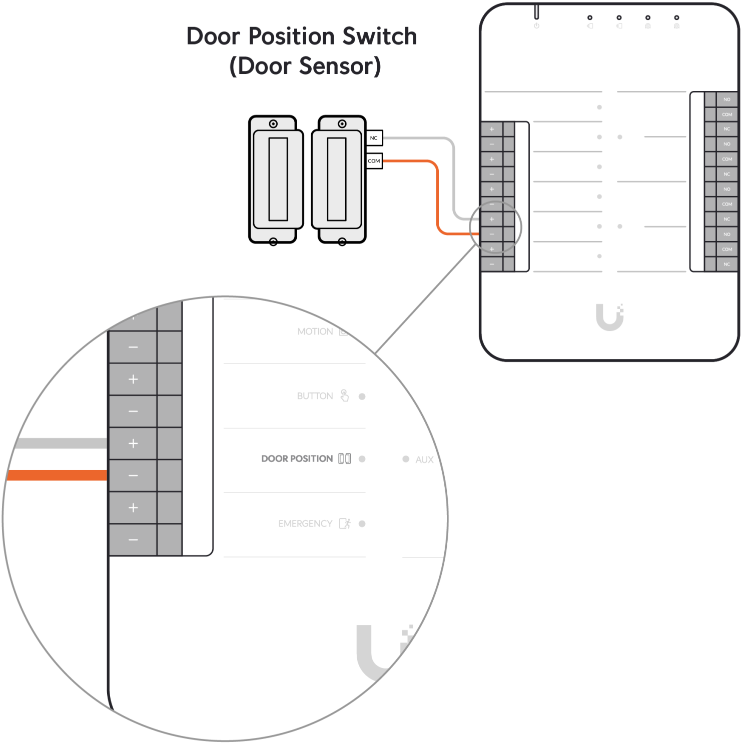
NC
COM
+
−
NO
COM
NC
MOTION
BUTTON
DOOR POSITION
AUX
EMERGENCY

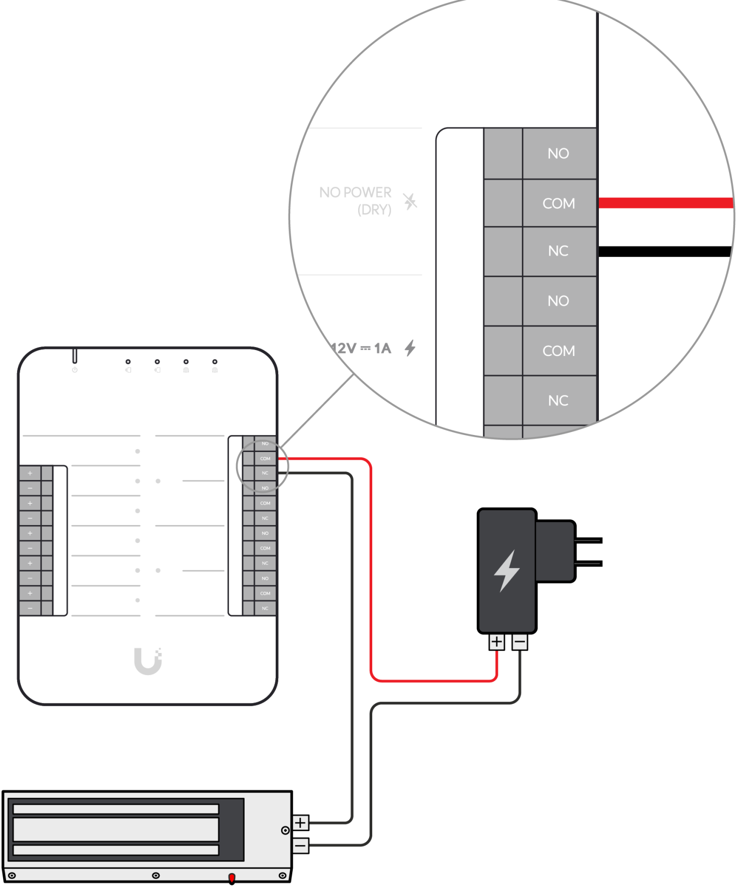
NO
COM
NC
NO
COM
NC
NO POWER (DRY)
12V ⎓ 1A
NO
COM
NC
NO
COM
NC
NO
COM
NC
NO
COM
NC
+
−
+
−
+
−
+
−
+
−
+
−
+
−

Fail-Safe Lock

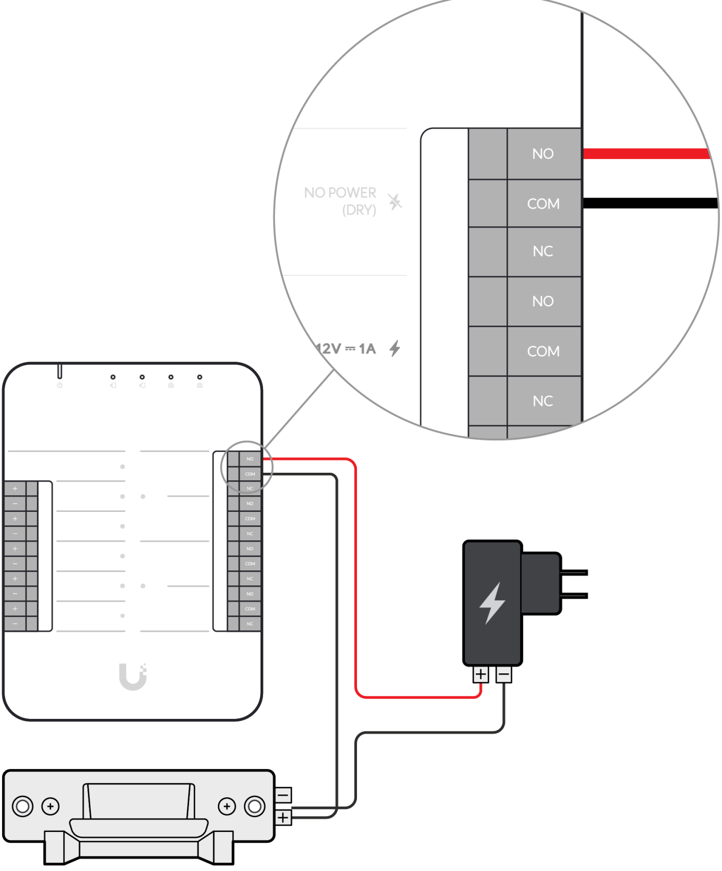
NO POWER
(DRY)
12V ⎓ 1A
NO
COM
NC
NO
COM
NC
+
−
+
−

Fail-Secure Lock

Push Button

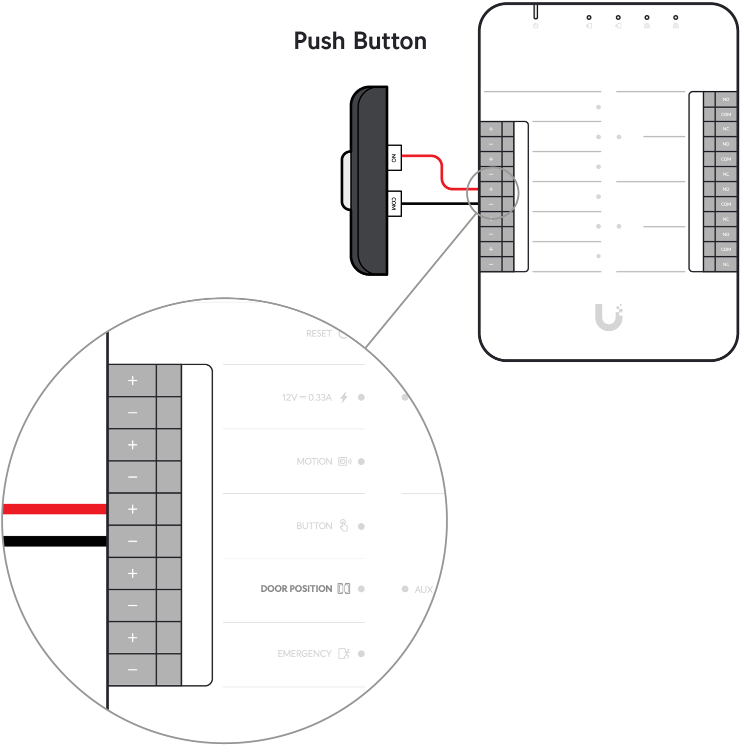
NO
COM
NC
RESET
12V ⎓ 0.33A
MOTION
BUTTON
DOOR POSITION
AUX
EMERGENCY

Fire Panel

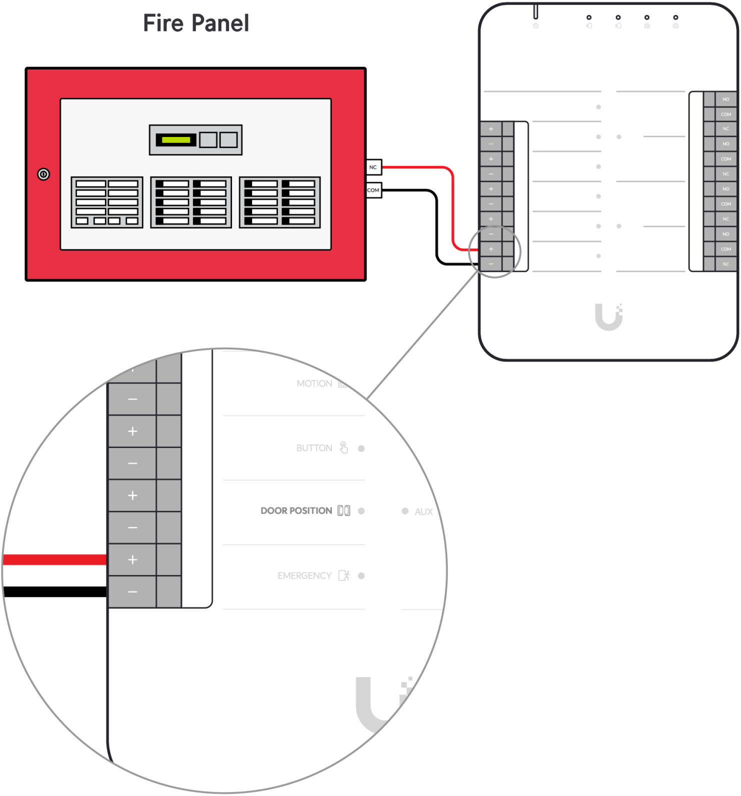
NC
COM
+
−
NO
COM
NC
MOTION
BUTTON
DOOR POSITION
AUX
EMERGENCY

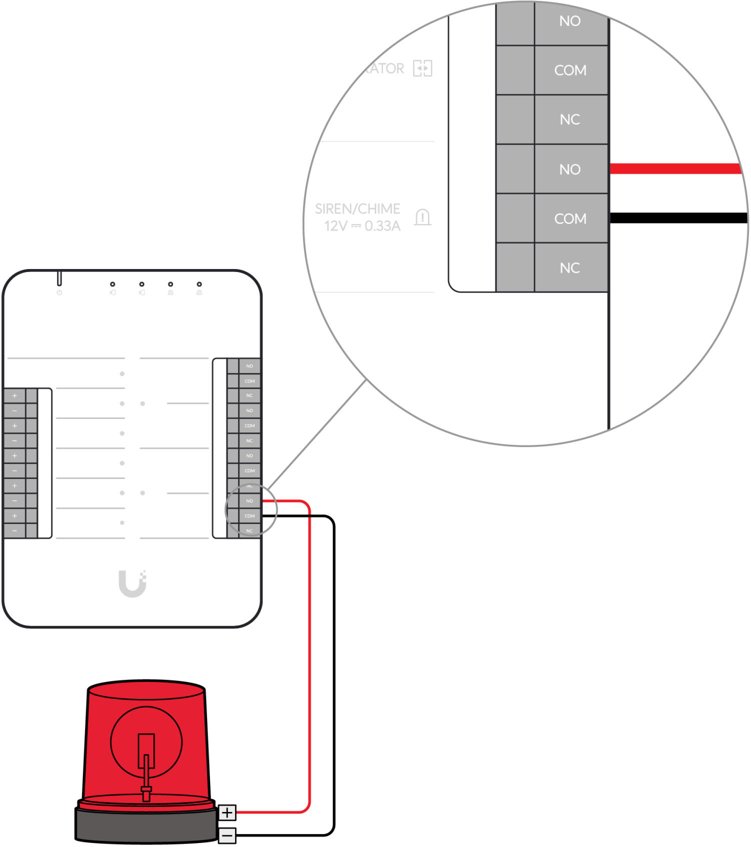
NO
COM
NC
NO
COM
NC
ATOR
SIREN/CHIME
12V ⎓ 0.33A
+
−

Siren

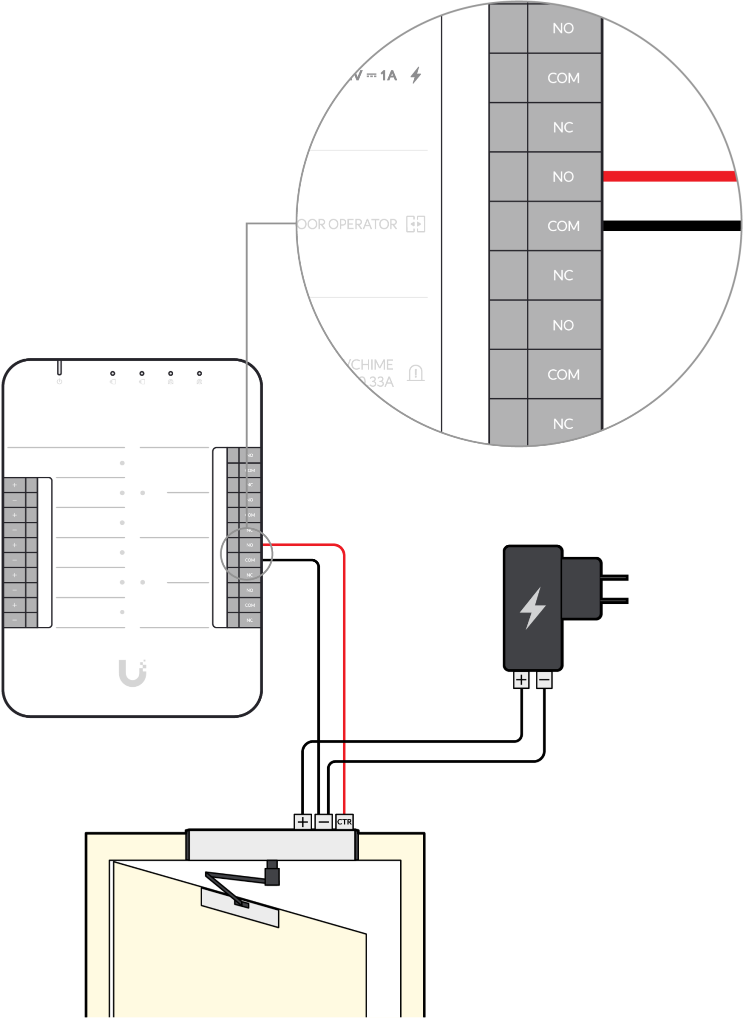
V ⎓ 1A
OOR OPERATOR
CHIME
0.33A
NO
COM
NC
NO
COM
NC
NO
COM
NC
+
−
+
−
CTR

Door Operator

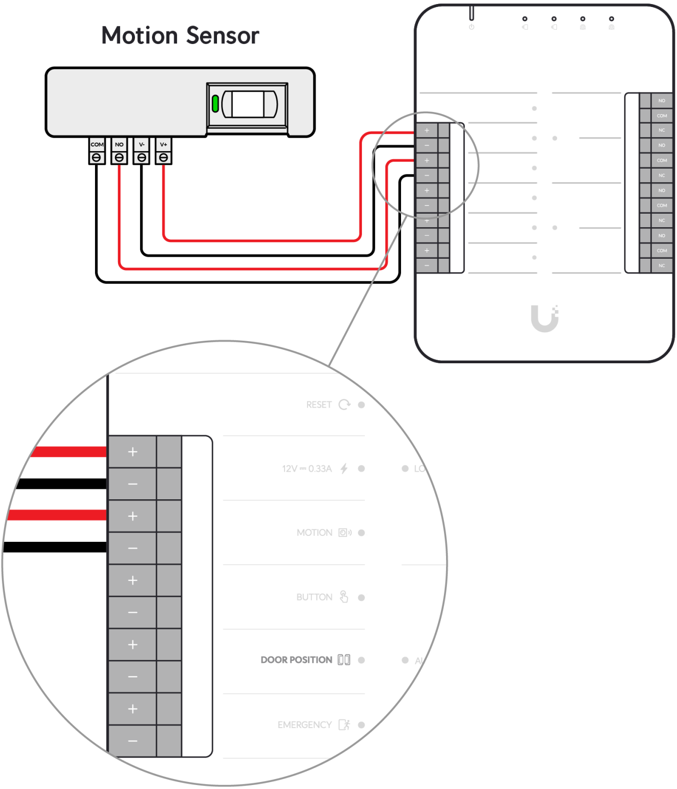
Motion Sensor
COM
NO
V-
V+
NO
COM
NC
NO
COM
NC
NO
COM
NC
NO
COM
NC
RESET
12V ⎓ 0.33A
MOTION
BUTTON
DOOR POSITION
EMERGENCY

3

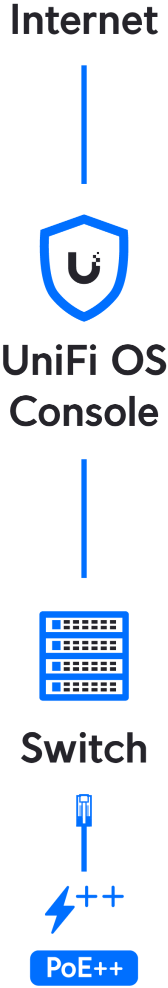
Internet
UniFi OS Console
Switch
PoE++

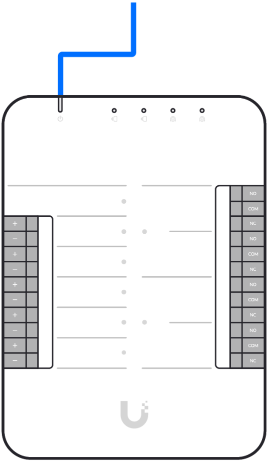
+
−
+
−
+
−
+
−
+
−
NO
COM
NC
NO
COM
NC
NO
COM
NC
NO
COM
NC

4

Download on the App Store

GET IT ON Google Play

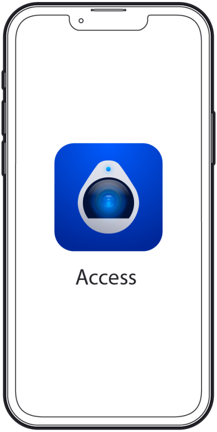

Get Answers
help.ui.com

UI Support

🔗

©2019-2021 Ubiquiti Inc. All rights reserved. Ubiquiti, Ubiquiti Networks, the Ubiquiti U logo, UniFi Access, and UniFi are trademarks or registered trademarks of Ubiquiti Inc. in the United States and in other countries. All other trademarks are the property of their respective owners.