TR-WM03-B-IN 3-inch Fixed Dome Mount

Specifications

Bracket	TR-WM03-B-IN
Application	Wall installation for IPC32X and IPC361X series
Dimensions	126mmx126mmx188mm (5” x5” x7.4”)
Weight	0.5kg(1.1lb)
Material	Aluminum alloy

Dimensions

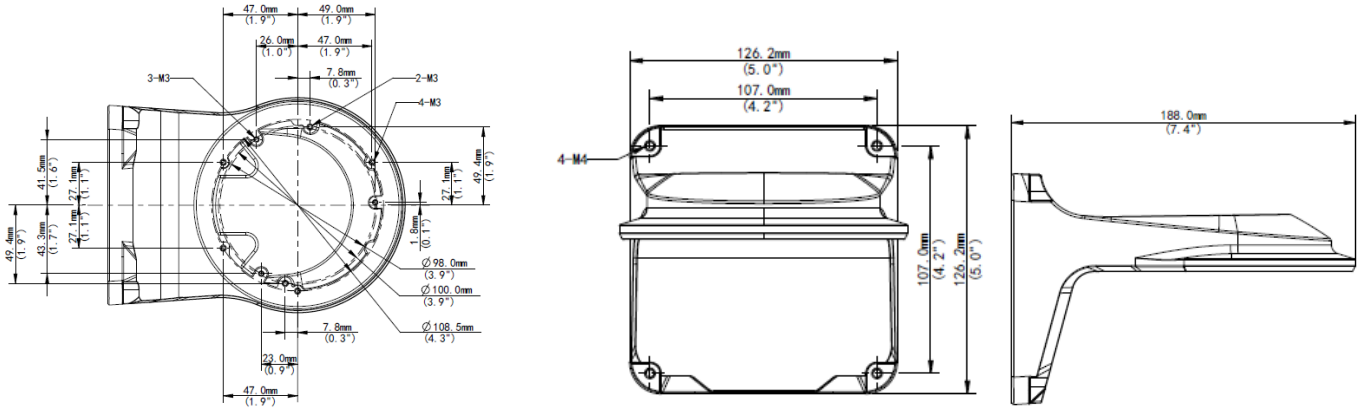

Zhejiang Uniview Technologies Co.,Ltd.

©2017 Zhejiang Uniview Technologies Co.,Ltd. All rights reserved.

*Product specifications and availability are subject to change without notice.